FOR-1754 Rev.1.1

未注公差/General tolerances(mm)														
0 ~ 3	>3 ~ 6	>6 ~ 10	>10 ~ 18	>18 ~ 30	>30 ~ 50	>50 ~ 80	>80 ~ 120	>120 ~ 180	>180 ~ 250	>250 ~ 315	>315 ~ 400	>400 ~ 500	>500	0.1/10
±0.12	±0.18	±0.22	±0.26	±0.31	±0.37	±0.57	±0.80	±0.93	±1.05	±1.15	±1.60	±2.20	±2.50	±2°

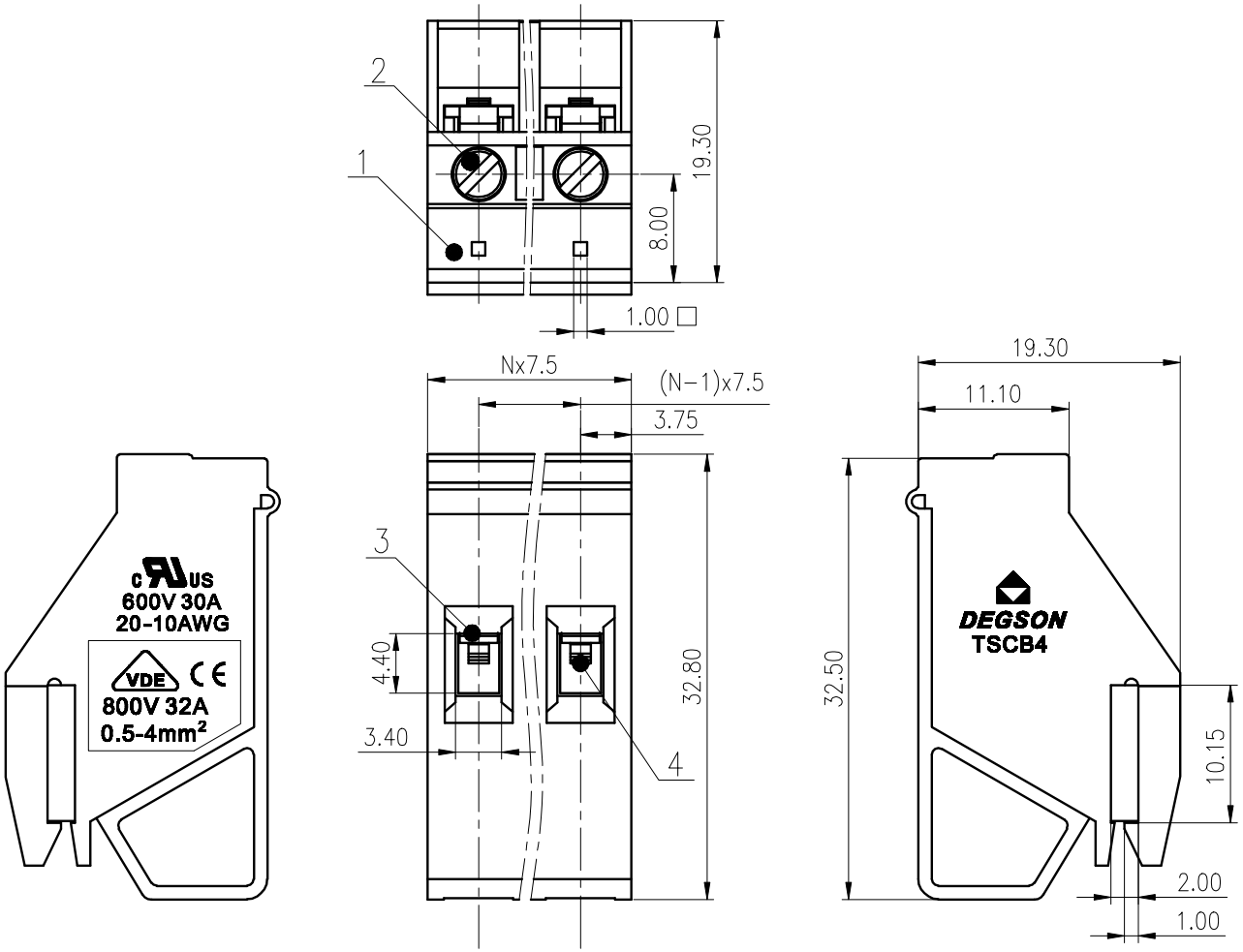

ITEM	NAME OF PART	MATERIAL	NOTES
4	Pin	Copper	Sn Plated
3	Cage	Copper alloy	M3/Ni Plated
2	Screw	Copper alloy	M3/Ni Plated
1	Housing	PA66	UL94V-0

UL 标准/UL Standard:	B	C	D
额定电压/电流/Rated Voltage(V)/Current(A)	600/30	600/30	600/5
IEC 标准/IEC Standard:			
过压类别/Overvoltage Category/污染等级/Pollution Degree	Ⅲ/2		
额定电压/电流/Rated Voltage(V)/Current(A)	800/32		
工频耐压/Withstanding voltage	AC2500V/1min		
螺丝扭矩/Torque Tightening(N·m/Lb.in)	M3, 0.5/4.43		
线径范围/Wire Range(mm²/AWG)	0.5~4/ 20~10		
间距/Pitch(mm)/线数范围/Poles	7.50/N=01~03P		
剥线长度/Stripping length(mm)	10-12		
使用温度范围/Operating temperature(°C)	-40~+105		
符合RoHS环保要求/Conform to RoHS	Yes		
标准颜色编号/Standard color number: RAL	RAL 2000		

REV	ECN	DESCRIPTION	DRFT	DATE

MATERIAL:

SURFACE:

MAT NO.: /

STATUS: /

APPD:

CHKD:

DRFT: CenMZ 2020.05.19

DEGSON®

宁波高松电子有限公司
NINGBO DEGSON ELECTRICAL CO., LTD

NAME: TSCB4-XXP-15-01A(H)

DRAWING NO.: TSCB4-C02

REV: T0

SIZE: A4

mm (inch)

TYPE: CUSTOMER DRAWING

SCALE: 2:1

SHEET: 1/1